This page was exported from - ripnet.us
Export date: Sat Mar 7 6:09:06 2026 / +0000 GMT

Lights Interface Design

Here's the design for the interface:

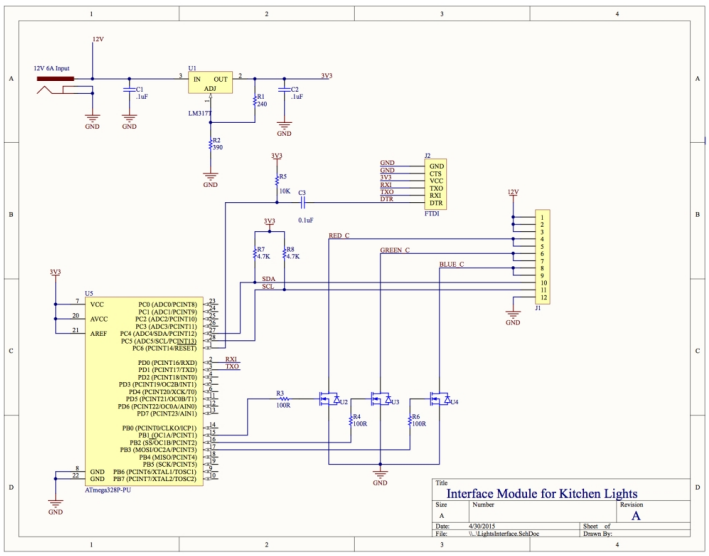

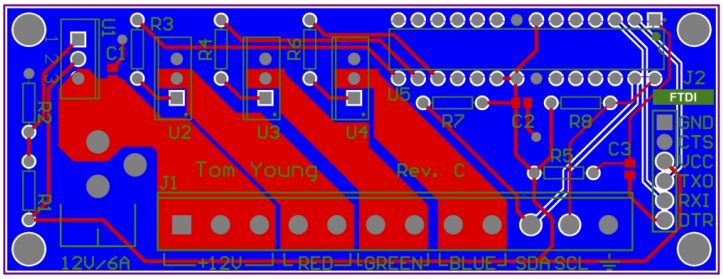

I'll be sending this to OSHPark.com for manufacture.